NAPOLI2019
30TH SUMMER UNIVERSIADE

VOLLEYBALL

2. Abbreviations
3. Contacts
4. General Information
4.1 General Competition Schedule
4.2 Athletes Villages
5. Competition Information
5.1 Technical Committee
5.2 Technical Regulations
5.3 Competition Format
5.4 Sport Information Service
5.5 Sport Entries and Eligibility
5.6 Sport Equipment
6 Competition and Training Venues
7 Competition Schedule
7.1 Training Schedule
7.2 Competition Schedule
8 Technical Meetings
9 ITOs and NTOs
10 Doping Control

2. ABBREVIATIONS

ACR	ACCREDITATION
AIR	NAPLES INTERNATIONAL AIRPORT (CAPODICHINO)
AVS2	ATHLETES VILLAGE SALERNO (GRAND HOTEL SALERNO)
BEN	BENEVENTO
CD	FISU DISCIPLINARY COMMITTEE
CER	CEREMONIES
CF	FISU FINANCIAL COMMITTEE
CIC	INTERNATIONAL CONTROL COMMITTEE
CM	FISU MEDICAL COMMITTEE
CMC	FISU MEDIA AND COMUNICATION COMMITTEE
CMI	FISU INTERNATIONAL MEDICAL COMMITTEE
CSU	FISU UNIVERSIADE SUPERVISION COMMITTEE
CSU-E	FISU SUMMER UNIVERSIADE SUPERVISION COMMITTEE
CT	FISU TECHNICAL COMMITTEE
CTI (*)	FISU INTERNATIONAL TECHNICAL COMMITTEE
CTI-UE	FISU INTERNATIONAL TECHNICAL SUB-COMMITTEE FOR THE SUMMER UNIVERSIADE
DCO	DOPING CONTROL OFFICER
DEL	DELEGATION SERVICES
EC	FISU EXECUTIVE COMMITTEE
EMS	EMERGENCY MEDICAL SERVICES
FCO	FIUMINICO AIRPORT (ROME)
FISU	FEDERATION INTERNATIONALE DU SPORT UNIVERSITAIRE
FIVB	FEDERATION INTERNATIONALE DU VOLLEYBALL
FNB	FOOD AND BEVERAGE
FOP	FIELD OF PLAY
GMT	GENERAL TECHNICAL MEETING
GRS	GAMES RESULTS SYSTEM
HB	HOST BROADCASTER
HOD	HEAD OF DELEGATION
IR	INTERNATIONAL REFEREE
ISF	INTERNATIONAL SPORT FEDERATION
IT	INFORMATION TECHNOLOGY
ITO	INTERNATIONAL TECHNICAL OFFICIAL
MED	MEDICAL SERVICES & DOPING CONTROL
MOS	MOSTRA D'OLTREMARE
NAP	NAPOLI (NAPLES)
NSF	NATIONAL SPORT FEDERATION
NTO	NATIONAL TECHNICAL OFFICIAL
NUOC	NAPOLI UNIVERSIADE ORGANIZING COMMITTEE
NUSF	NATIONAL UNIVERSITY SPORT FEDERATION

OVR	ON-VENUE RESULTS
OC	ORGANIZING COMMITTEE
PCO	PALACOSCIONI
PSE	PALASELE
PTE	PALATEDESCHI
PVE	PALAVELIERO
PZA	PALAZZETTO DELLO SPORT (ARIANO IRPINO)
RAN	RAIL STATION: NAPOLI CENTRALE
RAR	RAIL STATION: ROMA TERMINI
ROM	ROMA (ROME)
SIC	SPORT INFORMATION CENTER
SID	SPORT INFORMATION DESK
SU	SUMMER UNIVERSIADE
TA	TRANSPORTATION SYSTEM FOR ATHLETES AND DELEGATION OFFICIALS
TCC	FISU TECHNICAL COMMITTEE CHAIR
TD	TECHNICAL DELEGATE
TRA	TRANSPORTATION
TO	TECHNICAL OFFICIAL
T&S	TIMING AND SCORING
TP	TRASPORTATION SYSTEM FOR PUBBLIC
VVO	VOLLEYBALL
WADA	WORLD ANTI-DOPING AGENCY

3. CONTACTS

International University Sport Federation (FISU)

President: Mr. Oleg Matytsin (RUS)

Secretary-General/Chief Executive Officer: Mr. Eric Saintrond (BEL)

Address: Quartier UNIL-Centre, Batiment Synathlon, CH-1015 Lausanne, Switzerland

Tel: +41(0) 216926400

Email: summer.universiade@fisu.net

Website: http://www.fisu.net

Organising Committee Napoli 2019

Extraordinary Commissioner: Ing. Gianluca Basile

Director of Sport & Operations: Dr. Roberto Outeiriño Uceda

Address: Viale JF. Kennedy 54 – Mostra D'Oltremare

Napoli 80125

Tel: +39 (081) 19978113

Email: info@universiade2019napoli.it

Website: www.universiade2019napoli.it

Head of Delegation Service: Francis M. M. Cirianni PhD

Email: nusf@universiade2019napoli.it

Fédération Internationale de Volleyball (FIVB)

President: Ary S. Graça Filho (BRA)

Secretary General: Fernando Lima (BRA)

Director General: Azevedo Fabio (BRA)

Address: "Château Les Tourelles" Ch. Edouard-Sandoz 2-4 1006 Lausanne, Switzerland

Tel: +41(0) 213453535

Fax: +41(0) 213453545

E-mail: info@fivb.org

Website: http://www.fivb.org

Emergency Phone Number: 112

4. GENERAL INFORMATION

4.1 General Competition Schedule

Sports events of the 30th Summer Universiade 2019 Naples - Italy, shall be organized in the accordance with the most recent technical rules of the appropriate ISFs unless otherwise stated by the FISU Executive Committee.
The Volleyball events shall be organized in accordance with the most recent technical regulations of the Fédération Internationale de Volleyball (FIVB). In case of disagreement in the interpretation of these rules, the English text will be regarded as authoritative.

NAPOLI 2019 - COMPETITION SCHEDULE

Q= Qualifying Rounds / F= Finals

Version Marzo 2019

Sport/Event	Comp Days	Day -1 2-Jul Tues	Day 0 3-Jul Wed	Day 1 4-Jul Thu	Day 2 5-Jul Fri	Day 3 6-Jul Sat	Day 4 7-Jul Sun	Day 5 8-Jul Mon	Day 6 9-Jul Tues	Day 7 10-Jul Wed	Day 8 11-Jul Thu	Day 9 12-Jul Fri	Day 10 13-Jul Sat	Day 11 14-Jul Sun	Medals Events
Ceremonies			OC											CC	
Archery	5								Q	Q	Q	F	F		10
Athletics	6							F	F	F	F	F	F		50
Basketball	9		Q	Q	Q	Q	Q	Q	Q	F	F				2
Diving	7	Q	Q	F	F	F	F	F							15
Fencing	6			F	F	F	F	F	F						12
Football	12	Q		Q	Q	Q	Q	Q	Q	Q	Q	F	F		2
Gymnastics, Artistic	5		Q	F	F	F	F								14
Gymnastics, Rhythmic	3										Q	F	F		8
Judo	4			F	F	F	F								14
Rugby Sevens	3				Q	Q	F								2
Sailing	5							Q	Q	Q	Q	F			1
Shooting Sport	6			F	F	F	F	F	F						15
Swimming	7			F	F	F	F	F	F	F					40
Table Tennis	8			Q	Q	Q	F	Q	F	F	F				7
Taekwondo	7						F	F	F	F	F	F	F		19
Tennis	9				Q	Q	Q	Q	Q	Q	Q	F	F		7
Volleyball	9				Q	Q	Q	Q	Q	Q	Q	F	F		2
Water Polo	13	Q	Q	Q	Q	Q	Q	Q	Q	Q	Q	Q	F	F	2
Number of Sports x Day		3	4	10	13	13	14	13	13	11	11	9	8	1	**222**

*OC = Opening Ceremony / CC = Closing Ceremony / Q = Qualifying / F = Finals

4.2 Athletes Villages

The Delegations will be divided by sport in the 3 Main AV Areas as follows:

- Napoli – AVN1 (Athletes' Village Napoli 1)
- Caserta – AVC1 (Athletes' Village Caserta 1), AVC2, AVC3, AVC4
- Salerno – AVS1 (Athletes' Village Salerno 1), AVS2

4.2.1 AVN1 - Napoli Maritime Station (Athletics, Artistic and Rhythmic Gymnastics, Diving, Judo, Rugby 7s, Sailing, Swimming and Tennis)

In two luxury Cruise Ships, MSC Lirica and Costa Victoria, 9 sports will be lodge, with all the services for delegations available in the ships and in the Maritime Station.

4.2.2 AVC1 - Grand Hotel Vanvitelli (Basketball)

In one of the nicest 4 stars hotel located in the City of Caserta, the Basketball Players will enjoy the commodities offered by the Vanvitelli hotel with all the services for the delegations available inside the hotel.

4.2.3 AVC2 - Hotel Novotel Caserta (Waterpolo)

In exclusivity for the Waterpolo, this modern 4-star hotel will be the perfect rest place for the teams. All the service for the delegations available inside the hotel.

4.2.4 AVC3 - Hotel Golden Tulip Plaza Caserta (Taekwondo)

In one of the biggest 4 stars hotel located in the City of Caserta, the Taekwondo fighters will enjoy the commodities offered by the Golden Tulip Plaza Caserta hotel with all the services for the delegations available inside the hotel.

4.2.5 AVC4 - Hotel Golden Tulip Marina Resort in Castel Volturno (Shooting Sports and Table Tennis)

In an exclusive 4 stars hotel located in the Litorale Domizio, 2 sports will share the Village with all the service for the delegations available inside the hotel.

4.2.6 AVS1 - University Campus of Salerno, Fisciano (Football and Archery)

In one of the most advanced Italian University Campuses Football Players and Archers will enjoy the University atmosphere with all the services for delegation inside their own dormitories. 4 different buildings will host over 1000 delegation members.

4.2.7 AVS2 - Grand Hotel Salerno (Fencing and Volleyball)

In an exclusive 4 stars hotel located in the Seafront of Salerno City, 2 sports will share the Village with all the services for the delegations available inside the hotel.

5. COMPETITION INFORMATION

5.1 Technical Committee

In accordance with Article 3.6 of the *Regulations for the 30th Summer Universiade 2019 Naples - Italy*, there shall be a Technical Committee (CT) for each sport in the Summer Universiade program.

FISU Technical Committee Chair	Melanie SANFORD (CAN) Gilles LEPINE (CAN) Khosrow EBRAHIM (IRI)
ISF Technical Delegate	Zdeslav BARAC (CRO)
NSF Technical Delegate	Marco CARPANETO (ITA)
Competition Manager	Stefano TELESE (ITA)
Organizing Committee Representative	Roberto OUTEIRINO UCEDA (ESP)

5.2 Technical Regulations

The sports events of the 30th Summer Universiade 2019 Naples - Italy, shall be organized in the accordance with the most recent technical rules of the appropriate ISFs unless otherwise stated by the FISU Executive Committee.

The programme and duration of the events are fixed by the FISU Executive Committee in agreement with the Organising Committee and the CTI-UE. In principle, the competitions will last nine (9) days and include:
one (1) men's tournament: twenty (20) teams maximum
one (1) women's tournament: sixteen (16) teams maximum

For each tournament, each country selected is authorised to enter one (1) team of twelve (12) players.

Team Composition Players

A team may consist of up to twelve (12) players.

Within the twelve (12) players, a team has the right to register up to two (2) Liberos. Therefore, the team may be composed of:

– 12 regular players + 0 Libero;

– 11 regular players + 1 Libero;

– 10 regular players + 2 Libero.

In case a team is composed of less than twelve (12) players, only one (1) Libero can be included in the roster.

During the Preliminary Inquiry each participating team must submit its final list of regular players and Liberos to the 2019 Universiade Volleyball Control Committee.

At the first General Technical Meeting, the Head of Delegation or his/her representative shall confirm and sign the official list of athletes.
Any entry not duly confirmed at the first General Technical Meeting, will not be taken into consideration except for force majeure.

5.3 Competition Format

Drawing of Lots and Distribution of Teams
The "Drawing of Lots" for the distribution of Women's and Men's Volleyball teams into Preliminary Round pools was held Thursday, April 4, 2019 during the Head of Delegation Meeting in Naples, Italy.

Women's Preliminary Round Pools			
A	**B**	**C**	**D**
CAN	**BRA**	**TPE**	**USA**
THA	**GER**	**CZE**	**SUI**
RUS	**UKR**	**HUN**	**JPN**
MEX	**CHN**	**ARG**	**ITA**

Men's Preliminary Round Pools			
A	**B**	**C**	**D**
UKR	**RUS**	**IRI**	**JPN**
CZE	**POR**	**BRA**	**ARG**
TPE	**KOR**	**FRAU**	**SUI**
HKG	**USA**	**CAN**	**MEX**
CHI	**CHN**	**POL**	**ITA**

Daily Timetable
The daily timetable of matches is fixed by the FISU Technical Committee for Volleyball following a proposal by the Organising Committee.
The Organizer has the right to request last-minute changes in the order of matches established in the daily timetable and subject to the approval of the FISU Technical Committee for Volleyball if such changes can be communicated to the teams involved no less than 24 hours before the first matches in question.
The Organizer has the right to choose the competition hall in the Playoff Rounds based on the result of the competition.

2019 Napoli Summer Universiade – Volleyball – Men's and Women's Competition Schedule									
	Friday	Saturday	Sunday	Monday	Tuesday	Wednesday	Thursday	Friday	Saturday
	July 5	July 6	July 7	July 8	July 9	July 10	July 11	July 12	July 13
Women	Preliminary Round	Preliminary Round	Preliminary Round	Rest	Playoff Quarter Finals 1–16	Playoff Semi Finals 1 – 16	Playoff Finals 5–16	Playoff Finals 1–4	
Men	Preliminary Round	Preliminary Round	Preliminary Round	Preliminar y Round	Preliminary Round	Rest	Playoff Quarter Final 1–8 Quarter Final 9–16 Semi Final 17–20	Playoff Semi Final 1–8 Semi Final 9–16 Final 17–20	Playoff Finals 1–16

Competition Format – Women's Tournament
A total of sixteen (16) women's volleyball teams will participate in the 30th Summer Universiade in Naples, Italy. The Women's Volleyball Tournament will be conducted over eight days.

The competition will consist of two (2) phases:

- Preliminary round robin
- Playoff round: quarterfinals, semifinals, finals

There will be a total of 48 women's matches.

Preliminary Round

Four pools (A, B, C and D) will be formed, composed of four teams each. The format for each pool is single round robin, where every team plays each of the three other teams in their pool once. Each team will play a total of three matches. Each pool will play a total of six matches.

Playoff Round-Positions 1 to 8

Quarterfinals:

The first two teams in each preliminary pool will advance to the quarterfinals, eight teams in total. The format will be as follows:

1st 'A' vs. 2nd 'C' (A1 vs. C2)
1st 'B' vs. 2nd 'D' (B1 vs. D2)
1st 'C' vs. 2nd 'A' (C1 vs. A2)
1st 'D' vs. 2nd 'B' (D1 vs. B2)

Semifinals:

The four winners of the quarterfinals will advance to the 1st to 4th semifinals.
Winner A1/C2 vs. Winner B2/D1
Winner C1/A2 vs. Winner B1/D2
The four losers of the quarterfinals will proceed to the 5th to 8th semifinals.
Loser A1/C2 vs. Loser B2/D1
Loser C1/A2 vs. Loser B1/D2

Finals:

Winner of the two 1st to 4th semifinals will play for first (1st) and second (2nd) places – Gold Medal Match.
Losers of the two 1st to 4th semifinals will play for third (3rd) place – Bronze Medal Match.
Winners of the two 5th to 8th semifinals will play for fifth (5th) place.
Losers of the two 5th to 8th semifinals will play for seventh (7th) place.

Playoff Round-Positions 9 to 16

Quarterfinals:

Teams ranked third (3rd) and fourth (4th) in each preliminary pool with advance to 9th to 16th quarterfinals, eight teams in total. The format will be as follows:

3rd 'A' vs. 4th 'C' (A3 vs. C4)
3rd 'B' vs. 4th 'D' (B3 vs. D4)
3rd 'C' vs. 4th 'A' (C3 vs. A4)
3rd 'D' vs. 4th 'B' (D3 vs. B4)

Semifinals:

The four winners of the quarterfinals will advance to the 9th to 12th semifinals.
Winner A3/C4 vs. Winner B4/D3
Winner C3/A4 vs. Winner B3/D4
The four losers of the quarterfinals will proceed to the 13th to 16th semifinals.
Loser A3/C4 vs. Loser B4/D3
Loser C3/A4 vs. Loser B3/D4

Finals:

Winners of the two 9th to 12th semifinals will play for ninth (9th) place.
Losers of the two 9th to 12th semifinals will play for eleventh (11th) place.
Winners of the two 13th to 16th semifinals will play for thirteenth (13th) place.

Losers of the two 13th to 16th semifinals will play for fifteenth (15th) place.

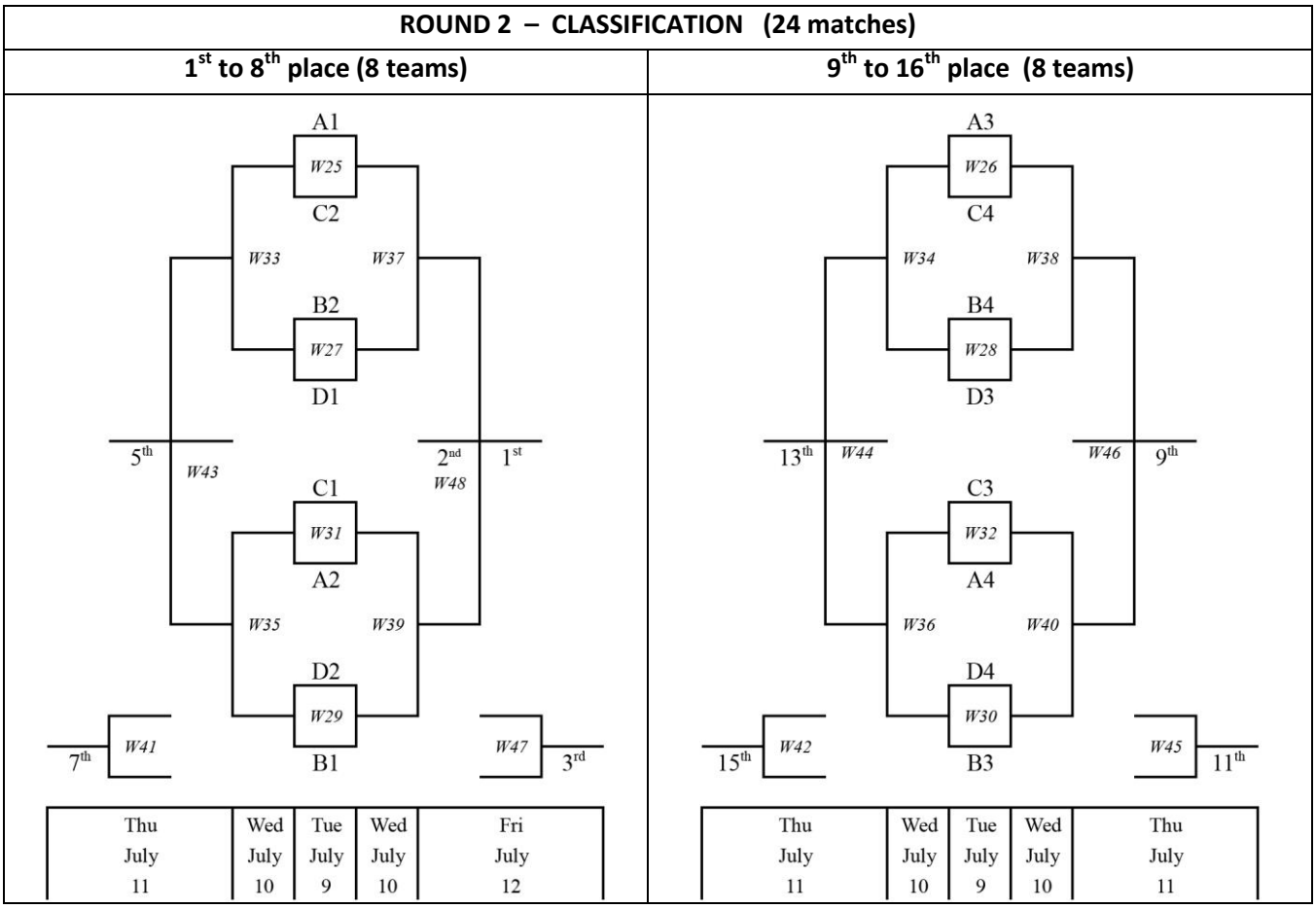

Competition Format – Men' Tournament

A total of twenty (20) men's volleyball teams will participate in the 30th Summer Universiade in Naples, Italy. The men's Volleyball Tournament will be conducted over nine days.

The competition will consist of two (2) phases:

- Preliminary round robin
- Playoff round: quarterfinals, semifinals, finals

There will be a total of 68 men's matches.

<u>Preliminary Round</u>

Four pools (A, B, C and D) will be formed, composed of five teams each. The format for each pool is single round robin, where every team plays each of the four other teams in their pool once. Each team will play a total of four matches. Each pool will play a total of ten matches.

Playoff Round-Positions 1 to 8

Quarterfinals: The first two teams in each preliminary pool will advance to the quarterfinals, eight teams in total. The format will be as follows:

1st'A' vs. 2nd'C' (A1 vs. C2)

1st'B' vs. 2nd'D' (B1 vs. D2)

1st'C' vs. 2nd'A' (C1 vs. A2)

1st‘D’ vs. 2nd‘B’ (D1 vs. B2)
Semifinals: The four winners of the quarterfinals will advance to the 1st to 4th semifinals.
Winner A1/C2 vs. Winner D1/B2
Winner B1/D2 vs. Winner C1/A2
The four losers of the quarterfinals will proceed to the 5th to 8th semifinals.
Loser A1/C2 vs. Loser D1/B2
Loser B1/D2 vs. Loser C1/A2

Winner of the two 1st to 4th semifinals will play for first (1st) and second (2nd) places –Gold Medal Match.
Losers of the two 1st to 4th semifinals will play for third (3rd) place –Bronze Medal Match.
Winners of the two 5th to 8th semifinals will play for fifth (5th) place.
Losers of the two 5th to 8th semifinals will play for seventh (7th) place.

Playoff Round-Positions 9 to 16
Quarterfinals: Team ranked third (3rd) and fourth (4th) in each preliminary pool with advance to 9th to 16th quarterfinals, eight teams in total. The format will be as follows:
3rd‘A’ vs. 4th‘C’ (A3 vs. C4)
3rd‘B’ vs. 4th‘D’ (B3 vs. D4)
3rd‘C’ vs. 4th‘A’ (C3 vs. A4)
3rd‘D’ vs. 4th‘B’ (D3 vs. B4)
Semifinals: The four winners of the quarterfinals will advance to the 9thto 12th semifinals.
Winner A3/C4 vs. Winner D3/B4
Winner B3/D4 vs. Winner C3/A4
The four losers of the quarterfinals will proceed to the 13thto 16thsemifinals.
Loser A3/C4 vs. Loser D3/B4
Loser B3/D4 vs. Loser C3/A4

Finals:
Winners of the two 9th to 12th semifinals will play for ninth (9th) place.
Losers of the two 9th to 12th semifinals will play for eleventh (11th) place.
Winners of the two 13th to 16th semifinals will play for thirteenth (13th) place.
Losers of the two 13th to 16th semifinals will play for fifteenth (15th) place.

Playoff Round-Positions 17 to 20
Quarterfinals: Teams ranked fifth (5th) in Preliminary pools A and C and ranked fifth (5th) in pools B and D will advance to 17th to 20nd place quarterfinals, four teams in total. The format will be as follows:
5th ‘A’ vs. 5th ‘C’ (A5 vs C5)
5th ‘B’ vs. 5th ‘D’ (B5 vs D5)

Finals:
Winners of the two 17th to 20th semifinals will play for seventeenth (17th) place.
Losers of the two 17th to 20th semifinals will play for nineteenth (19th) place.

ROUND 2 – CLASSIFICATION (28 matches)

1st to 8th place (8 teams) **9th to 16th place (8 teams)** **17th to 20th place (4 teams)**

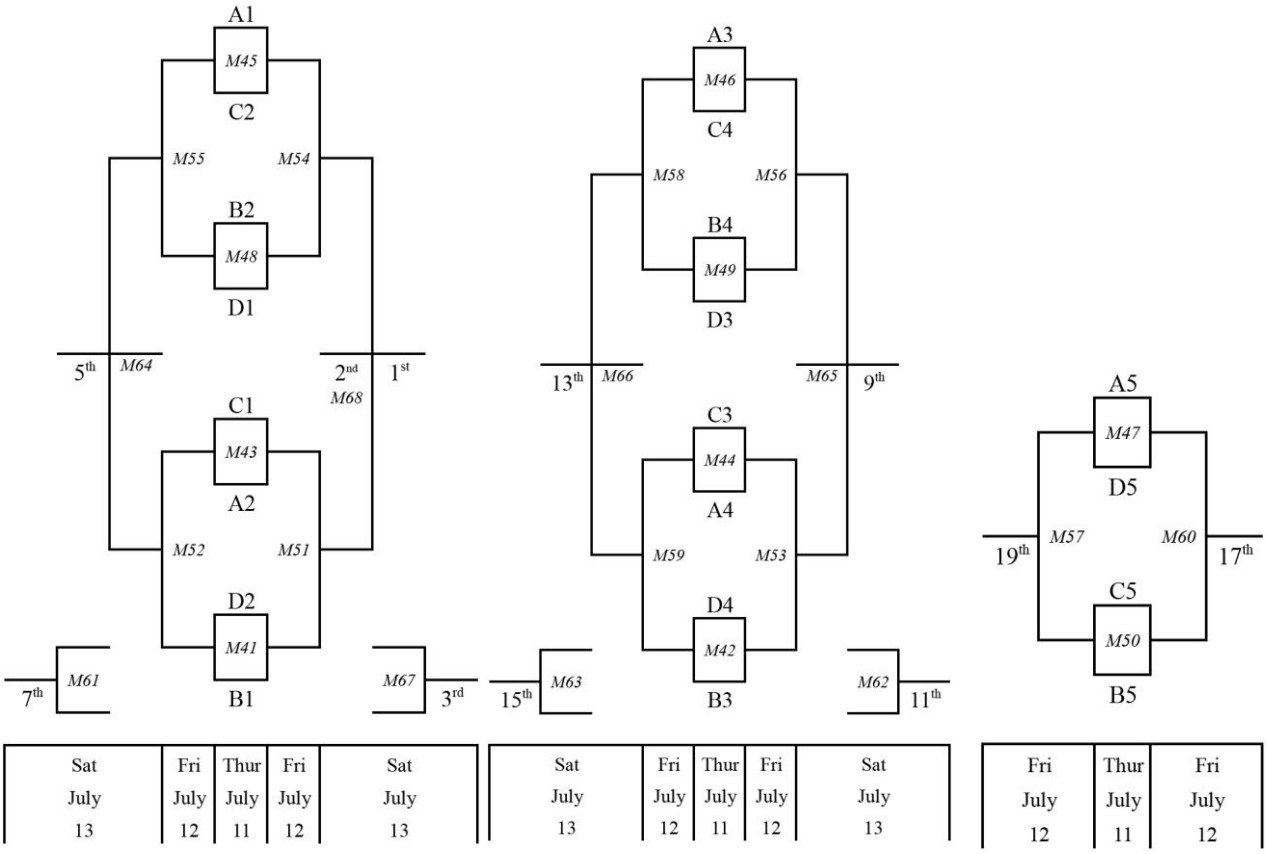

RANKING OF TEAMS

The following criteria will be implemented to establish the ranking of teams after the Preliminary Round.

Number of victories

By number of matches won and lost among teams of the same pool.

In the Case of Equal Number of Match Victories

8.3.1 Number of points gained

If two (2) or more teams have the same number of victories (match won, match lost), they will be classified in descending order by the points gained by each team per match as follows:

Match won	3-0; 3-1	3 points
Match won	3-2	2 points

Match lost	2-3	1 point
Match lost	0-3; 1-3	0 point
Match forfeited		0 points (25-0;25-0;25-0)

(FIVB Event Regulations, May 4, 2018)

IN THE CASE OF EQUAL POINTS
8.3.2 Set quotient = If two (2) or more teams are tied on the number of points gained, they will be classified in descending order by the quotient resulting from the division of the number of all sets won by the number of all sets lost.
8.3.3 Points quotient = If the tie still persists based on the set quotient (see Article 8.3.2), the teams will be classified in descending order by the quotient resulting from the division of all points scored by the total of points lost during all sets.
8.3.4 If the tie continues to persist based on the point quotient (see Article 8.3.3), the priority will be given to the team which won the last match between them. When the tie in point quotient is between three or more teams, a new classification of these teams under the terms of Articles 8.3.1, 8.3.2 and 8.3.3 will be made taking into consideration only the matches involving the teams in question.

5.4 Protests and Appeals

Protests and Appeals shall be conducted in accordance with the Regulations for the 30th Summer Universiade 2019 Naples – Italy.

Any protest of a sport or disciplinary nature must reach the Jury or other competent authority, by the Head of Delegation or his/her representative, according to the regulations laid down by the appropriate ISF. Unless otherwise stated by the technical regulations of the sport concerned (cf. Art. 12), this protest must be submitted in writing and accompanied by a deposit of fifty Euros which will be returned if the protest is considered justified.

Any decision of the Jury of Appeal or equivalent authority of a sport is final and must be reported immediately to the Head of Delegation of the country concerned.

Any disciplinary situation, which cannot be satisfactorily resolved by the Sports Technical Committees and the sport-specific disciplinary regulations, will be reported to the FISU Disciplinary Committee for further action to be taken.

Where appropriate, a report will also be sent to the ISF concerned.

5.5 Sport Information Services

Sport Information Desk will operate at each competition venue on competition days, as well as during scheduled training sessions. The Sport Information Desk will provide information on the competitions staged at the venue where it is located and will be in operation from the first day of training till the end of the competition period. The Sport Information Desk will operate similarly to a reception desk and are the primary point of distributing all Sport information including the following:

- Distribution of Technical Handbooks
- Competition schedule
- Training schedule
- Booking Training slots

- Technical meeting information
- Distribution of daily sport results

Other miscellaneous enquiries

- Operating hours for the Sport Information Desk will vary depending on the competition program.
- The SID is operated by sport-specific volunteers and supervised by Competition Management.
- Access to the SID will be given to accredited Team Officials only to ensure that information is communicated efficiently and effectively to all National Federations.
- Notice boards will also be available for posting Competition updates.

The opening days of the SIDs will be subject to the competition schedules. They will be operated from 1 hour before the competition starts to 1 hour after the competition.

5.6 Sport Entries and Eligibility

5.6.1 Participation

Only the athletes who satisfy the following conditions may take part in a FISU sporting event:

a) be a national of the country they represent;

b) be at least 18 and no older than 25 years of age on the 31st December of the year of the event (age range specified in the FISU regulations and entry forms of the concerned Event);

1.1.1 c) meet the conditions laid down under Art. 5.2

1.1.2 Article 5.2 (FISU REGULATIONS) Participation

Only delegations with athletes will be approved as official delegations participating in the Summer Universiade. Only the following may participate as athletes in the Summer Universiade:

a) students who are currently officially registered as proceeding towards a degree or diploma at the university or similar institute, the status of which is recognised by the appropriate national academic authority of their country;

b) former students of the institutions mentioned in a) who have obtained their academic degree or diploma in the calendar year preceding the event.

Notwithstanding Article 5.2.2, in countries with fewer than 2,000,000 inhabitants or having fewer than 5,000 university students, students attending technical or secondary schools may participate in FISU events provided they have been attending their establishments for at least two (2) years.

Countries wishing to take advantage of the concession in the first paragraph of Article 5.2.3 must submit an application to the FISU Executive Committee at least six (6) months before the opening ceremony of the Summer Universiade. Such an application must be supported by documents endorsed by the appropriate state or national academic authorities.

<u>Age Restriction</u>

All athletes must satisfy the following conditions:

a) be a national of the country they represent;

b) be at least 18 and no older than 25 years of age on the 31st December of the year of the event (i.e. born between 1 January 1994 and 31 December 2001).

Suspensions

No athlete or official under a current suspension from FISU, ISF or the national federation of his/her country may take part in the Summer Universiade.

Athletes and/or teams of a sport suspended by the ISF, shall not be eligible to participate in the SU during the term of the suspension. Exceptions shall only be permitted after review and approval of the FISU EC.

The athlete and the delegation registering an athlete for a FISU Event are at all times fully responsible for the athletes' eligibility with all the disciplinary consequences for the NUSF (or for non-Member Associations the representing authority) and the athlete (cf. Art. 3.4.6).

Athletes

Athletes taking part in the Summer Universiade competitions must arrive in the Athletes' Village at least forty-eight (48) hours before their first competition.

Athletes arriving late will be liable for disqualification from the competition, subject to the approval of the FISU Executive Committee or the Chair of the CTI-UE.

5.6.2 Entries Timetable

Entry Form	Date
Advanced Payment for participation (50%)	03/05/2019
Nominative Individual Entry for Competitors and Officials (I)	03/06/2019
Sport Entry Meeting	Upon Arrival
Final Confirmation of the Athletes and Judges	1st General Technical Meeting 4/7/2019

Entries will be accepted only from those organizations which have been invited to participate. All delegations must ensure that all their entries reach the Organizing Committee by the deadline and in the form prescribed by the Organizing Committee and the FISU regulations.

Intention of Participation, General and Individual entries shall be submitted online in order to meet the required entry deadlines. Entries received after the required deadlines will not be taken into consideration, except in the event of force majeure, with the agreement of the FISU Executive Committee and on the advice of the Organizing Committee.

Individual entry forms of athletes from a non-member association must be countersigned by the NSF or by the NOC, and stamped with a seal from the said organization.

Late Athlete Replacement

All replacements requested by the NUSFs after the individual entry deadline of June 3, 2019 shall follow the Late Athlete Replacement Policy. Details of the Late Athlete Replacement Policy are included in the I-Form User Guide which will be distributed on the FISU official website and the OAS.

5.6.3 Sport Entry Meeting

The Sport Entries office is located in The International Zone of the Stazione Marittima, right next to the CIC Office. One month before the opening ceremony (4 June 2019), the Head of Delegation should take an appointment for a meeting with the Sport Entries Office to confirm the list of participating athletes and events when the delegations first arrive to the Athletes' Village. The working hours of the Sport Entries office is from 07:00 to 21:00, from 27 June to 15 July 2019.

5.6.4 Advanced Payment

Two (2) month before the opening ceremony of the Summer Universiade, countries entering Volleyball must confirm their participation with an advance payment of 50% of the participation fees per entered competitor and official.

The advanced payment shall be directly collected by the OC. Should a competitor compete, his/her deposit shall be credited to the remainder of the participation fees to be paid to the OC.

5.7 Sport Equipment

The sport equipment approved by FISU and FIVB for the Volleyball competition of the 30th Summer 2019 Universiade, Napoli will be supplied by the Organizing Committee.

EQUIPMENT	MODEL	COMPANY
Game ball	MVA-200	MIKASA
Floor Covering	TARAFLEX EVOLUTION 7,5 mm	GERFLOR
Net System	FIVB APPROVED	SENOH CORPATION

5.7.1 Uniform

Team uniforms shall comply with these Regulations and the FIVB Volleyball Sports Material, Team Equipment & Advertising Guidelines (see Annex A). In particular:

5.7.1.2 Numbers on uniforms shall comply with the requirements of the FIVB Volleyball Sports Material, Team Equipment & Advertising Guidelines. The numbering allowed will be from number 1 to number 20.

5.7.1.3 The name of the country shall be placed on the front of the jersey (shirt), and the player's family name shall be printed on the back of the jersey (shirt) in accordance with the FIVB Volleyball Sports Material, Team Equipment & Advertising Guidelines.

5.7.1.4 The names and numbers shall be of a contrasting colour to the part of the jersey where they are placed.

5.7.1.5 Only team uniforms in compliance with these Regulations and the FIVB Volleyball Sports Material, Team Equipment & Advertising Guidelines (see Annex A) are to be used in FIVB, World and Official Competitions.

5.7.1.6 For FIVB and World Competitions, each team shall have available two (2) sets of playing uniforms, each one of a different colour. One of them must have a jersey which is 75% white and the two (2) other sets must be of different dark colours.

5.7.1.7 The teams must present at the preliminary inquiry:

a. their injury prevention devices; and

b. their uniform colours, using the uniform of the captain to that effect, and indicate their order of preference. Before each phase or round of the competition, the FIVB Control Committee or FIVB Delegate will make the final decision and announce the uniform colours to be worn for each match.

5.7.1.8 During matches, persons authorized to sit on the team bench must be appropriately dressed with jacket and tie or the official team uniform (indicating the country name and possibly the family name). Persons not respecting this ruling will not be permitted access to their team's bench.

5.7.1.9 Body suits or other similar garments should not exceed the length of the shorts or shirts. Medical supports may be authorized by the Referees, but body suits are not to be considered as medical supports.

6 COMPETITION AND TRAINING VENUES

Venue	Name	Distance AV *	Seats			
			Public	Athletes	Media	VIP
Competition / Finals (Main)	PalaSele – Eboli (SA)	37 km/ 34 min	7000	250	150	120
Competition	PalaCoscioni – Nocera Inferiore (SA)	19 km/ 24 min	1352	25	30	20
Competition	PalaTedeschi – Benevento	64 km/ 55 min	3420	25	30	20
Competition	Palazzetto dello Sport – Ariano Irpino (AV)	71 km/ 1 h	1742	25	30	20
Training	Polifunzionale Soccavo – Napoli (2 courts)	70 km/ 60 min				
Training	Palazzetto dello Sport – Casalnuovo di Napoli (NA)	59 km/ 47 min				
Training	Palaveliero – San Giorgio a Cremano (NA)	56 km/ 50 min				
Training	Palazzetto dello Sport – Capriglia (SA)	9 km/ 15 min				

*The distances are calculated from the Grand Hotel Salerno

7 COMPETITION AND TRAINING SCHEDULE

7.1 COMPETITION SCHEDULE

2019 Napoli Summer Universiade – Volleyball – Men's and Women's Schedule

MEN – 20 teams (68 matches total)

Group 'A'		
1	UKRAINE	UKR
2	CZECH REPUBLIC	CZE
3	CHINESE TAIPEI	TPE
4	HONG KONG	HKG
5	CHILE	CHI

Group 'B'		
1	RUSSIAN FEDERATION	RUS
2	PORTUGAL	POR
3	REPUBLIC OF KOREA	KOR
4	UNITED STATES OF AMERICA	USA
5	CHINA	CHN

Group 'C'		
1	IRAN	IRI
2	BRAZIL	BRA
3	FRANCE	FRA
4	CANADA	CAN
5	POLAND	POL

Group 'D'		
1	JAPAN	JPN
2	ARGENTINA	ARG
3	SWITZERLAND	SUI
4	MEXICO	MEX
5	ITALY	ITA

WOMEN – 16 teams (48 matches total)

Group 'A'		
1	CANADA	CAN
2	THAILAND	THA
3	RUSSIAN FEDERATION	RUS
4	MEXICO	MEX

Group 'B'		
1	BRAZIL	BRA
2	GERMANY	GER
3	UKRAINE	UKR
4	CHINA	CHN

Group 'C'		
1	CHINESE TAIPEI	TPE
2	CZECH REPUBLIC	CZE
3	HUNGARY	HUN
4	ARGENTINA	ARG

Group 'D'		
1	UNITED STATES OF AMERICA	USA
2	SWITZERLAND	SUI
3	JAPAN	JPN
4	ITALY	ITA

Legend: TBD = To be determined

C1 Pala Sele		
Eboli		
37 km	34 min	8.000

C2 Pala Coscioni		
Nocera		
19 km	20 min	1.352

C3 Pala Tedeschi		
Benevento		
64 km	55 min	3.420

C4 Palazzetto dello Sport		
Ariano Irpino		
71 km	60 min	1.742

R1 PRELIMINARY ROUND Total: 64 matches (40 M + 24 W)

R2 PLAYOFF ROUND Total: 52 matches (28 M + 24 W)

M	W	Day/date	Time	20 M + 14 W = 34 Total			18 M + 16 W = 34 Total			18 M + 8 W = 26 Total			12 M + 10 W = 22 Total		
				Gender	Countries	Pool	Gender	Countries	Pool	Gender	Countries	Pool	Gender	Countries	Pool
		Friday, July 5 Total: 16 matches 8M + 8W	12:00	M1	MEX-ARG	D	W1	TPE-ARG	C	W2	CAN-MEX	A	M2	CHI-CZE	A
			14:30	W3	SUI-JPN	D	W4	CZE-HUN	C	W5	THA-RUS	A	M3	TPE-UKR	A
			17:30	M4	SUI-ITA	D	W6	GER-UKR	B	M5	BRA-POL	C	M6	USA-KOR	B
			20:00	W7	USA-ITA	D	W8	BRA-CHN	B	M7	FRA-IRI	C	M8	RUS-POR	B
		Saturday, July 6 Total: 16 matches 8M + 8W	12:00	M9	JPN-MEX	D	M10	CZE-TPE	A	W9	MEX-RUS	A	W10	ARG-HUN	C
			14:30	W11	USA-SUI	D	M11	HKG-CHI	A	W12	CAN-THA	A	W13	TPE-CZE	C
			17:30	M12	POL-FRA	C	M13	CAN-BRA	C	W14	CHN-UKR	B	M14	KOR-RUS	B
			20:00	W15	ITA-JPN	D	M15	ARG-SUI	D	W16	BRA-GER	B	M16	CHN-USA	B
		Sunday, July 7 Total: 16 matches 8M + 8W	12:00	W17	JPN-USA	D	M17	TPE-HKG	A	W18	THA-MEX	A	W19	CZE-ARG	C
			14:30	M18	IRI-POL	C	M19	FRA-CAN	C	W20	RUS-CAN	A	W21	HUN-TPE	C
			17:30	W22	SUI-ITA	D	M20	UKR-CZE	A	W23	UKR-BRA	B	M21	POR-KOR	B
			20:00	M22	ITA-ARG	D	M23	SUI-JPN	D	W24	GER-CHN	B	M24	RUS-CHN	B
	Rest	Monday, July 8 Total: 8 matches 8M + 0W	12:00	M25	CHI-TPE	A	M26	BRA-FRA	C						
			14:30	M27	HKG-UKR	A	M28	CAN-IRI	C						
			17:30	M29	USA-RUS	B	M30	CHN-POR	B						
			20:00	M31	JPN-ITA	D	M32	MEX-SUI	D						
		Tuesday, July 9 Total: 16 matches 8M + 8W	12:00	W25	1st A – 2nd C	QF 1– 8	W26	3rd A – 4th C	QF 9–16	M33	KOR-CHN	B	M34	UKR-CHI	A
			14:30	W27	1st D – 2nd B	QF 1– 8	W28	3rd D – 4th B	QF 9–16	M35	POR-USA	B	M36	CZE-HKG	A
			17:30	M37	ARG-JPN	D	W29	1st B – 2nd D	QF 1– 8	W30	3rd B – 4th D	QF 9–16	M38	POL-CAN	C
			20:00	M39	ITA-MEX	D	W31	1st C – 2nd A	QF 1– 8	W32	3rd C – 4th A	QF 9–16	M40	IRI-BRA	C
	Rest	Wednesday, July 10 Total: 8 matches 0M + 8W	12:00	W33	LW25 – LW27	SF 5 – 8	W34	LW26 – LW28	SF 13 – 16						
			14:30	W35	LW29 – LW31	SF 5 – 8	W36	LW30 – LW32	SF 13 – 16						
			17:30	W37	WW25 – WW27	SF 1 – 4	W38	WW26 – WW28	SF 9 – 12						
			20:00	W39	WW29 – WW31	SF 1 – 4	W40	WW30 – WW32	SF 9 – 12						
		Thursday, July 11 Total: 16 matches 10M + 6W	12:00	M41	1st B – 2nd D	QF 1-8	W41	LW33 – LW35	7–8 Final	M42	3rd B – 4th D	QF 9-16	W42	LW34 – LW36	15–16 Final
			14:30	M43	1st C – 2nd A	QF 1-8	W43	WW33 – WW35	5–6 Final	M44	3rd C – 4th A	QF 9-16	W44	WW34 – WW36	13–14 Final
			17:30	M45	1st A – 2nd C	QF 1-8	W45	LW38 – LW40	11–12 Final	M46	3rd A – 4th C	QF 9-16	M47	5th A – 5th D	SF 17-20

NAPOLI2019
30TH SUMMER UNIVERSIADE

	20:00	M48	1st D – 2nd B	QF 1-8	W46	WW38 – WW40	9–10 Final	M49	3rd D – 4th B	QF 9-16	M50	5th B – 5th C	SF 17-20
Friday, July 12 Total: 12 matches 10M + 2W	12:00	M51	WM41 – WM43	SF 1-4	M52	LM41 – LM43	SF 5–8	M53	WM42 – WM44	SF 9-12			
	14:30	M54	WM45 – WM48	SF 1-4	M55	LM45 – LM48	SF 5-8	M56	WM46 – WM49	SF 9-12	M57	LM47 – LM50	19-20 final
	17:30	W47	LW37 – LW39	3 – 4 final	M58	LM46 – LM49	SF 13–16	M59	LM42 – LM44	SF 13-16	M60	WM47 – WM50	17-18 final
	20:30	W48	WW37 – WW39	1 – 2 final									
Saturday, July 13 Total: 8 matches 8M + 0W	12:00				M61	LM52 – LM55	7– 8 final	M62	LM53 – LM56	11-12 final	M63	LM58 – LM59	15-16 final
	14:30				M64	WM52 – WM55	5 - 6 final	M65	WM53 – WM56	9-10 final	M66	WM58 – WM59	13-14 final
	17:30	M67	LM51 – LM54	3 – 4 final									
	20:30	M68	WM51 – WM54	1 – 2 final									

7.2 TRAINING SCHEDULE*

The final form of the Training Schedule will be published separately from the Technical Handbook prior to the start of the Universiade.

8. TECHNICAL MEETING

Date	Time	Activities	Venue
01/07/2019	TBD	First Technical Committee Meeting	Eboli
02/07/2019	TBD	Venue Inspection	Main and Secondary Venues
02/07/2019	TBD	Preliminary Inquiry	Grand Hotel Salerno
03/07/2019	TBD	Venue Inspection	Main and Secondary Venues
03/07/2019	TBD	Preliminary Inquiry	Grand Hotel Salerno
03/07/2019		Local Theory Clinics for NTO's	Competition Venues
03/07/2019		Local Practical Clinic for NTO's	Competition Venues
04/07/2019	TBD	Venue Inspection	Main and Secondary Venues
04/07/2019	TBD	Preliminary Inquiry	Grand Hotel Salerno
04/07/2019		Central Theory Clinic for IR's and NTO's	Main and Secondary Venues
04/07/2019		Central Practical Clinic for IR's and NTO's	Main and Secondary Venues
04/07/2019	20:00	General Technical Meeting	Grand Hotel Salerno

* Please note that the technical meeting schedule is provisional and subject to change.

Technical Meetings shall be held in accordance with 3.6 of the Regulations for the 30th Summer Universiade 2019 Naples – Italy:

- There shall be a Technical Committee (CT) for each sport in the programme of a Summer Universiade which shall consist of:

- one (1) or, if designated, more FISU Technical Committee Chair (s) who will chair the CT (who shall be a member/members of the CTI-UE for the sport concerned);
- one (1) representative of the Organising Committee for the sport concerned;
- the Technical Delegate of the appropriate NSF of the organizing country;
- the Technical Delegate of the appropriate ISF;
- additional experts who may be appointed to assist the Technical Committee as appropriate.
- The Technical Committee will be assisted in its work by adequate personnel.
- The Organising Committee shall appoint one administrative secretary to the Technical Committee who shall take the minutes of all meetings.
- No more than two (2) members of the CT should be of the same nationality, not including the FISU Technical Committee Chair(s).

During the days prior to the start of the sports events for which s/he is responsible for, the FISU Technical Committee Chair(s) shall convene the following meetings:

- the meeting of the Technical Committee, which the staff members of the Organising Committee for the sport concerned may also attend as observers;
- the first (1st) General Technical Meeting, to which the members of the Technical Committee and a representative from each country competing in the sport concerned shall be invited.

The first (1st) meeting of the Technical Committee shall:

- prepare the first (1st) General Technical Meeting;
- define the criteria to set up a jury of appeal (if appropriate according to the rules and regulations of the ISF);
- decide on the appointment system for technical officials (TOs);
- approve the detailed programme for their sport;
- propose the nomination of additional experts to assist the Technical Committee as appropriate.

The first (1st) General Technical Meeting must:

- approve the daily timetable for their sports;
- appoint a jury of appeal, if appropriate, according to the rules of the ISF of the sport concerned.
- take, if necessary, the emergency measures in order to ensure the smooth technical running of the events;
- confirm the official list of the competitors who will take part in the competitions. The Head of Delegation or his/her representative shall confirm the attendance of their country's athletes for the sport
- concerned by signing the said list and, if required, by filling in an entry form. No changes shall be made to the list after the General Technical Meeting.
- Exceptions shall only be permitted if stated in the technical regulations of the sport concerned.
- This entry form shall contain the accreditation card number attributed to the participant by the CIC, the given name, the family name and the competitor's number.
- The competitors that are not approved by the CIC will not be authorized to take part in the competition.

The Technical Committee is responsible for determining the appointment system of technical officials for each competition.

Before the end of the Summer Universiade the members of the CT (cf. Art. 3.5.1) shall meet to make recommendations for the future organization of their sport.

The Chairperson of the CTI-UE shall have the right to attend all meetings of the Technical Committees.

The FISU Technical Committee Chair(s), prior to the start of the sport for which s/he is responsible for in the Summer Universiade, is/are obliged to:

- maintain close cooperation with the Chairperson of the CTI-UE and with the representative of the Organising Committee in the CT;
- ensure that the regulations of the ISF concerned are observed;
- inspect the sport facilities and the equipment to be used during the competition;

gather exact information concerning:

  - the number and the level of performance of participating competitors or teams;
  - the number and qualification of international technical officials that are proposed by the participating delegations;
  - the draw system.
- prepare the CT meeting (cf. Art. 3.5.2). In agreement with the members of the CT, s/he shall prepare the proposals for:
  - the appointment of a jury of appeal, if appropriate according to the regulations of the ISF;
  - the nomination of additional experts to become members of the CT, if appropriate;
  - the appointment system for technical officials for each competition.

At the end of the competitions of the sport for which s/he is responsible, the FISU Technical Committee Chair(s) has/have to sign the complete protocol of results produced by the Organising Committee (cf. Art 4.8.e) in one (1 official) authentic copy and submit it to FISU no later than 48 hours after the end of the competitions:

After the Summer Universiade, each FISU Technical Committee Chair has to present a report on the organisation of the event including recommendations for the future Summer Universiade.

8.1 PRELIMINARY INQUIRY

All teams must attend a Preliminary Inquiry prior to the start of the Volleyball General Technical Meeting. The Preliminary Inquiry meetings will take place July 2, 3 and 4. The time and location in Universiade Athlete's Village will be announced. Meetings with teams will last 30 minutes and will be located at the Grand Hotel Salerno.

This meeting is to realize the following purposes:

- To receive the final list of team Players, Bench staff, and Statisticians that will be allowed access to the Control Area
- To confirm FISU accreditation numbers of participating athletes.
- To verify correct spelling of individual names.
- To view team uniforms, colors and shirt numbers, and receive preferences.

The Preliminary Inquiry should be attended by the:

- Team Manager
- Head coach
- English interpreter (if necessary)

You are requested to bring the following to this meeting:

1. Individual Universiade identification cards attributed by FISU CIC for all team members (Athletes; Head Coach; Assistant Coach(es); Trainer; Team statisticians (2 maximum).
2. The O-2bis form with final name list (maximum 12) of regular players and Libero(s) (0, 1, or, 2); 1 Head Coach; 1 Assistant Coach; 1 Trainer or 2nd Assistant Coach; and Team Statisticians (maximum 2)
3. Team uniforms. One sample of:

3.1 Team captain's playing uniform (shirt and shorts) in each colour (minimum of two colours)
3.2 Each set of Libero uniforms (one of each color)
3.3 The team officials' uniform (polo shirt, training suit), if the latter is not a suit

4. Team uniforms, equipment, and accessories displaying advertising.
5. Preference of uniform colours.

Topics covered at the preliminary inquiry will include

- Verify final list of players and team officials and correct spelling and data for Universiade Results System and VIS
- Uniforms and equipment
- Review of all policies and competition rules. Any competition or venue related issues should be raised during the Preliminary Inquiry, not during the General Technical Meeting.

9 ITOs AND NTOs

Technical Officials include referees and judges and other sport-specific officials that are required for the smooth running of the sports competitions. There are International Technical Officials (ITOs) and National Technical Officials (NTOs) in accordance with the rules and regulations of each sport. In principle, ITOs take the senior-officiating positions. They are nominated by the ISFs or proposed by the NUSFs according to the technical regulations of each sport, and approved by the CTI-UE. The numbers and functions of ITOs vary according to the sport. NTOs are nominated by the NSFs in consultation with the OC and are taking a support role.

Detailed duties and obligations regarding ITOs are determined in the ITO Policy.

Nominations

The ITOs can be nominated through two (2) ways, as indicated below.

a) The ISF/CTI-UE proposes and nominates the ITOs:

- Archery;
- Artistic Gymnastics;
- Athletics;
- Basketball;
- Fencing;
- Football;
- Judo;
- Rhythmic Gymnastics;
- Table Tennis;
- Taekwondo;
- Tennis;
- Volleyball;
- Rugby Sevens;
- Sailing;
- Shooting Sports;
- Swimming.

b) The delegation proposes and the ISF/CTI-UE nominates the ITOs:

- Diving;
- Water Polo.

For Diving and Water Polo, countries must forward to the Organising Committee at the latest four (4) months before the opening ceremony of the Summer Universiade the name(s) and category of their required ITOs as set out in the regulations of each particular sport. If the names are not received by this time, the Organising Committee shall have the right to arrange for substitute officials.

Eventually, all the ITOs are nominated by the respective ISF in collaboration with the FISU Technical Committee Chair.

Numbers

- Sixteen (16) FIVB International Referees or International Referee Candidates for the Women's Tournament
- Twenty (20) FIVB International Referees or International Referee Candidates for the Men's Tournament
- Nine (9) members – four (4) International and five (5) NSF – for Technical Sub-Committee for Volleyball Referees
- Seven (7) members – four (4) International and three (3) NSF – for Technical Sub-Committee for Volleyball Jurors
- Sixty-four (64) NTOs – forty (40) Line Judges and twenty-four (24) Official Scorers – for Women's and Men's Tournaments.

10 DOPING CONTROL

10.1 General Information

Doping Control during the Napoli 2019 Universiade will be strictly conducted by the Organizing Committee according to WADA and FISU regulations in order to ensure a fair competition and promote good sportsmanship.

Doping Control will begin from the opening date of the Athletes' Village and last until the end of the Universiade. Participating athletes must abide by the relevant regulations and follow given guidelines when they have been selected and notified for testing. Any athlete who refuses to undergo testing, or interferes with the testing process, will be considered to have committed a doping violation and be subject to disciplinary action.

10.2 Doping Control Station (DCS)

Doping control station are designed in accordance with WADA and FISU regulations. Samples for testing are collected in the Doping Control Station of each competition venue and can be collected at the Doping Control Center (Doping Control Station) located within the Athletes' Village.

10.3 Athlete Selection

The FISU Medical Committee will select athletes for testing. Either rank in a competition will be taken into account, or random selection and target testing will be applied.

10.4 Accompanying Persons

Athletes may be accompanied by an additional person (coach, trainer, team doctor, etc.) and an interpreter if desired.

10.5 Reporting to Doping Control Station

The athlete must report to the doping control station in a reasonable amount of time from selection. The athlete will be allowed to attend ceremonies, press conference, etc., as long as they are accompanied by their chaperon.

10.6 Sample Collection

Athletes selected for testing will be notified immediately following the competition and will be under constant visual observation by a chaperon until they enter the Doping Control Station. At the station, sample (urine and/or blood) will be collected in a vessel, then sealed and submitted for transportation to the WADA approved laboratory under the supervision of a Doping Control Officer.

10.7 Athletes Obligation

The athlete must have their Accreditation with them at all times.
The athlete must report all medications taken in the prior month.
The athlete must present their TUE Document if he/she has one.

10.8 Testing Organization & Result

Collected samples will be analysed usually within 48 or 72 hours of collection at a WADA-accredited laboratory and results will be directly notified to the FISU Medical Chair. Athletes who test positive for banned drugs and fail the doping test may be subject to disqualification and disciplinary action.

10.9 Additional Controls Requested

A team may request for doping control tests to be performed on an athlete who has not been selected for doping control.
Examples of indications for this request are for National Records, or Target Testing. These athletes have to complete the “FISU Doping Control Request Form”. They will then be escorted to the Doping Control Station. Costs for these tests will be the responsibility of the requesting organization. Results management for these tests will be the responsibility of FISU and the appropriate International Federation.